96-300-B30-L-V

Temptrol® Shower System with Hand Shower

Temptrol Pressure-Balancing mixing valve with lever handle, adjustable stop screw to limit handle turn. Wall/hand shower with in-line vacuum breaker, flexible 5′ metal hose, wall connection and flange, 30″ slide bar for hand shower mounting.

Modifications:

Suffix X: Integral service stops—allows water shut-off at valve for service

Suffix IPS: 1/2 inch female IPS connections

Suffix X-CHKS: Integral check stops - for use in installations where a positive shut-off device is used downstream of mixing valve

Suffix QD: Quick-disconnect for hand spray units

Suffix B48: 48″ adjusting bar in place of standard 30″ bar

Suffix 1.5: 1.5 gpm (5.7 L/min) flow rate restrictor (Requires substituting T-300-V hand shower wand with EF-100)

Suffix 2.0: 2.0 gpm (7.6 L/min) flow rate restrictor (Requires substituting T-300-V hand shower wand with EF-100)

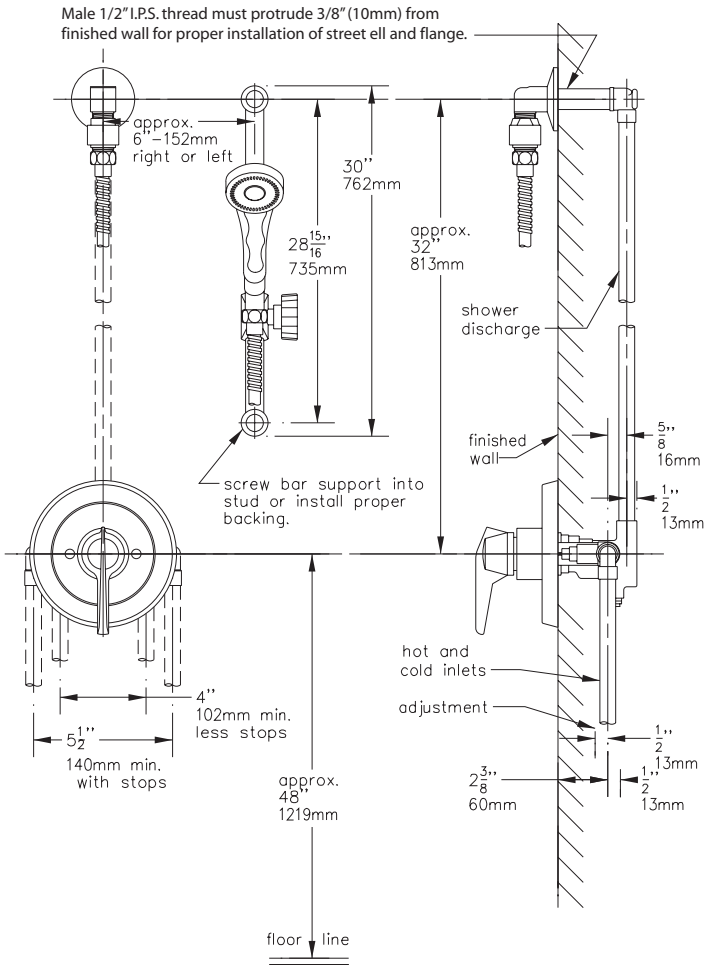

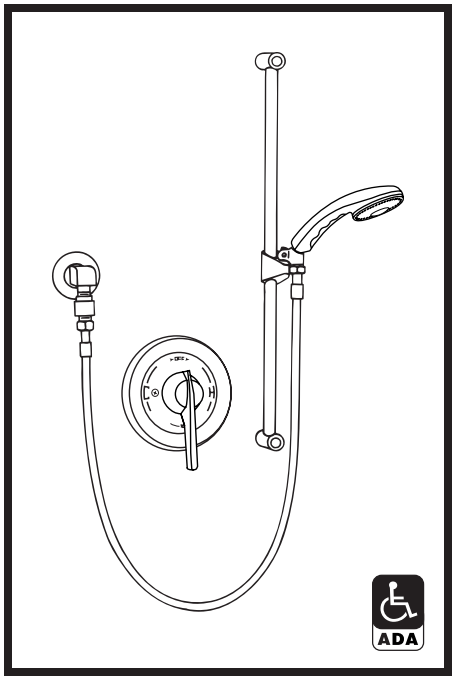

SYMMONS PRODUCTS MEET ANSI A112.18.1M, EPA '92 AND ALL KNOWN FLOW RATE REQUIREMENTS.
Shower Heads and Hand Showers 2.5 GPM (9.5 L/min)

Job/Location

. . . . . .

. . . . . .

Engineer

. . . . . .

. . . . . .

Contractor

. . . . . .

. . . . . .

ADA *This drawing to be used for rough-in installation only. All floor to center dimensions optional. Concealed piping and fittings not furnished by manufacturer. Dimensions are for ADA compliance (Americans with Disabilities Act) consult ADAAG or your state regulations for proper product choice and mounting locations. For complete installation, adjustment and service information see installation instructions.*

Symmons Industries, Inc. ▪ 31 Brooks Drive ▪ Braintree, MA 02184
(800) 796-6667, (781) 848-2250 ▪ Fax (800) 961-9621, (781) 843-3849
Website: www.symmons.com ▪ Email: customerservice@symmons.com

SYMMONS®
the smart choice™

©2011 Symmons Industries, Inc. Printed in U.S.A. ▪ 011811