3-320

Showeroff® shower limiter valve with integral stop for steel wall and 1/2" IPS connections. Fre-Flo institutional shower head with adjustable spray. Nozzle-type design for maximum protection against hard water mineral build-up. All mounting fasteners for valve and head are vandal resistant hex socket type.

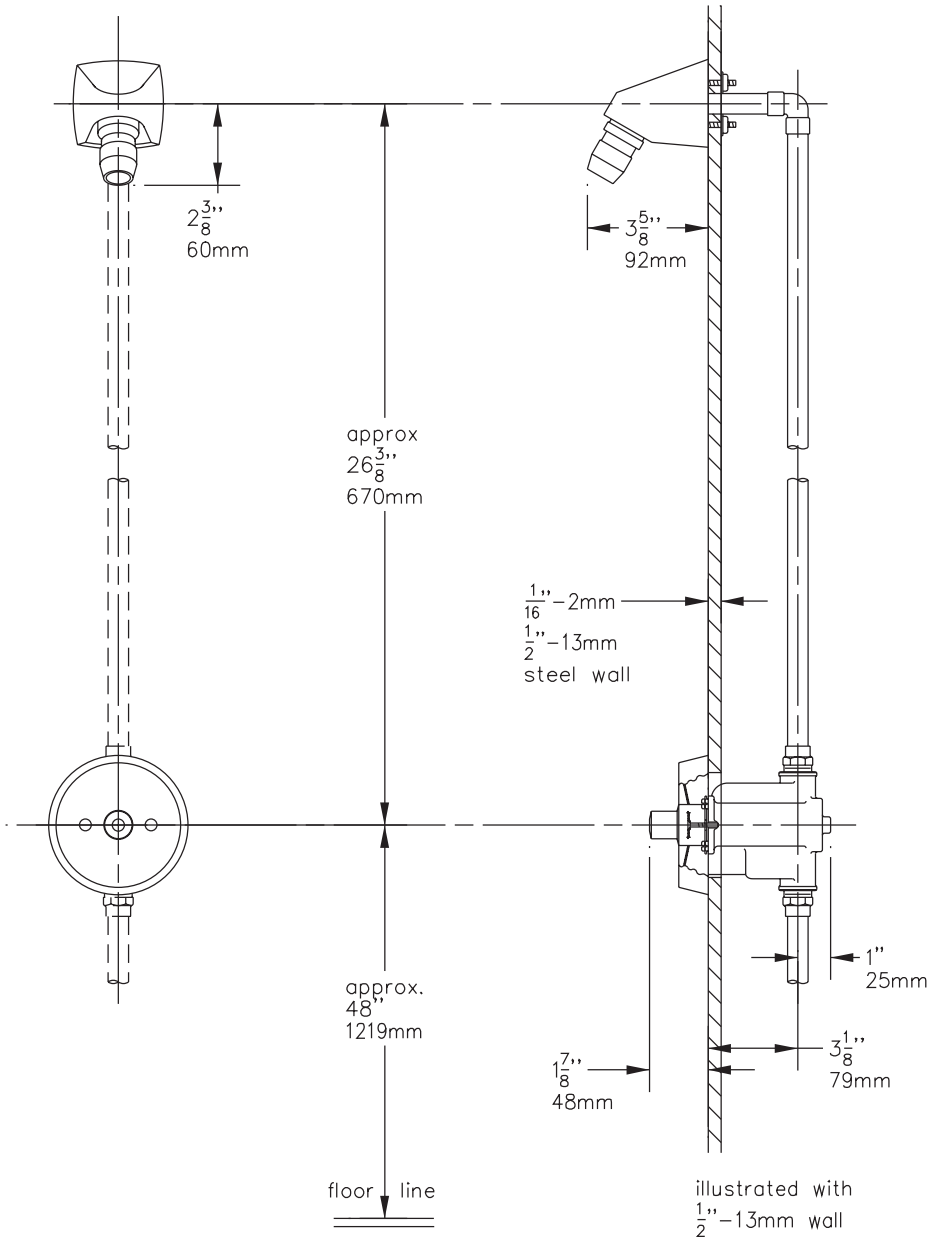

This drawing to be used for rough-in installation only. All floor to center dimensions optional. Concealed piping and fittings not furnished by manufacturer. For ADA compliance (Americans with Disabilities Act) consult ADAAG or your state regulations for proper product choice and mounting locations. For complete installation, adjustment and service information see installation instructions.

Symmons Industries, Inc. ▪ 31 Brooks Drive ▪ Braintree, MA 02184
(800) 796-6667, (781) 848-2250 ▪ Fax (800) 961-9621, (781) 843-3849
Website: www.symmons.com ▪ Email: customerservice@symmons.com

©2003, 2008 Symmons Industries, Inc. Printed in U.S.A. ▪ 050608

SYMMONS®
the smart choice™