ELKAY®

SPECIFICATIONS

Wall Mount 8" Center Commercial Faucet
Models LK940DS20L2H, LK940DS20T4H, LK940DS20T6H

FEATURES

Model LK940DS20L2H
- Two hole dual handle wall mount faucet
- Quarter turn ceramic disc cartridge
- 1/2" adjustable inlets
- Solid brass construction
- Chrome finish
- Includes spout swing restriction pin

Model LK940DS20T4H
- Same as LK940DS20L2H except with 4” wrist blades handles

Model LK940DS20T6H
- Same as LK940DS20L2H except with 6” wrist blades handles

COMPLIES WITH:
- ASME/ANSI A112.18.1
- CSA B125-01
- NSF/ANSI 61
- ADA
- UPC/CUPC
- IAPMO Listed

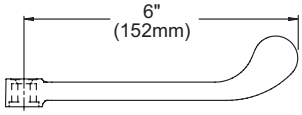

Model LK940DS20T6H

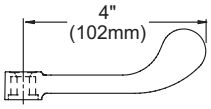

Model LK940DS20T4H

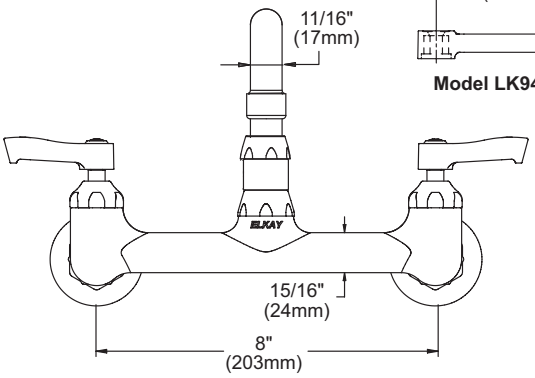

Model LK940DS20L2H

FRONT VIEW

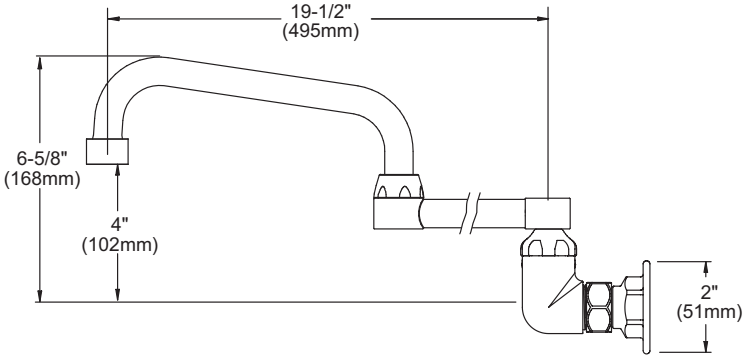

SIDE VIEW

Job Name:	**Item #:**
Notes:	
Architect/Engineer Approval:	**Date:**

SEE OTHER SIDE FOR REPLACEMENT PARTS

Elkay
elkayusa.com

2222 Camden Court, Oak Brook, IL 60523
1-630-574-8484 Fax: 1-630-574-4509

©2010 Elkay
LK940DS20L2H_940DS20T4H_940DS20T6H (8/10)